## Demension

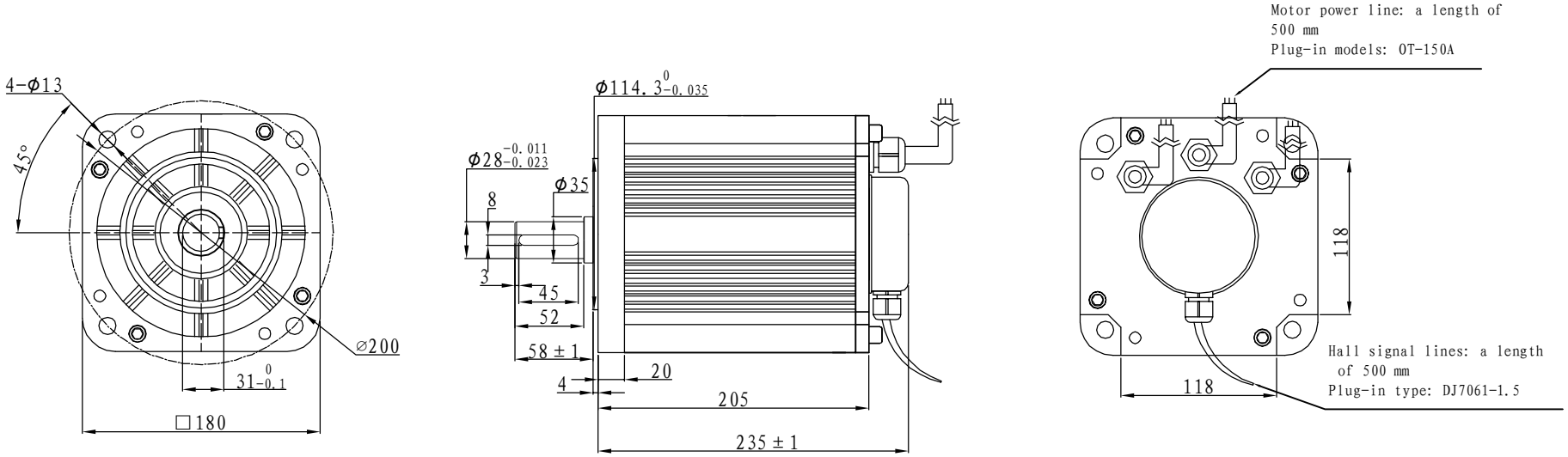


### Motor to Hall Relationship

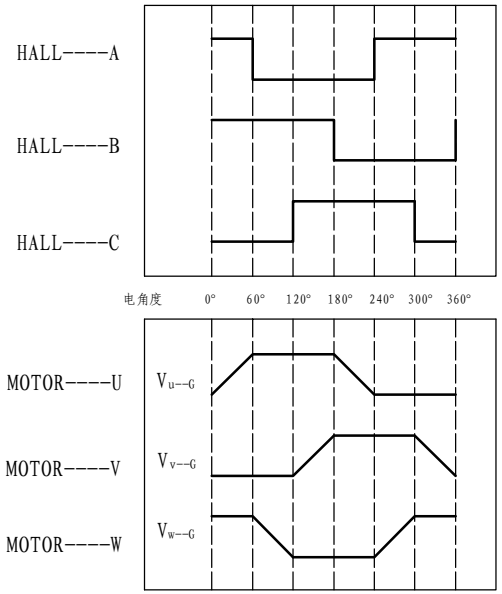


PHASE TO GROUND VOLTAGE
ROTATION CW FROM THE FLANGE

### Line Define

#### Power Wire

| | |
|---|---|
| Red | Motor U |
| Yellow | Motor V |
| Blue | Motor W |

#### Feedback Wire

| Hall line colour | Hall signal definition | Plug serial number |
|---|---|---|
| Orange and black | 5V | 1 |
| Orange | 0V | 2 |
| Yellow | Hall A | 4 |
| Blue | Hall B | 5 |
| Green | Hall C | 6 |

### Tecnichal Data

| | |
|---|---|
| Type | 180WD-M16020-48V |
| Power (KW) | 3.4 |
| Rated voltage (V) | 48 |
| Rated current（A） | 82 |
| Rated speed(rpm) | 2000 |
| Rated torque（NM） | 16 |
| Rotor inertia（Kgcm2) | 55 |
| Protection rank | IP65 |
| Insulation rank | F |
| Appropriate environment | Temperature: 0～50℃<br>Humidity: ＜90%<br>(No dewdrop) |
| Motor weight（KG） | 18.6 |

## Demension

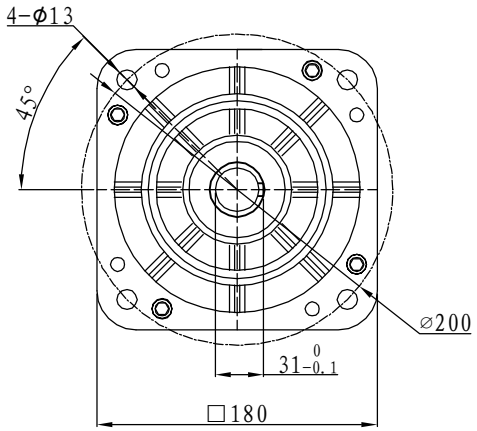


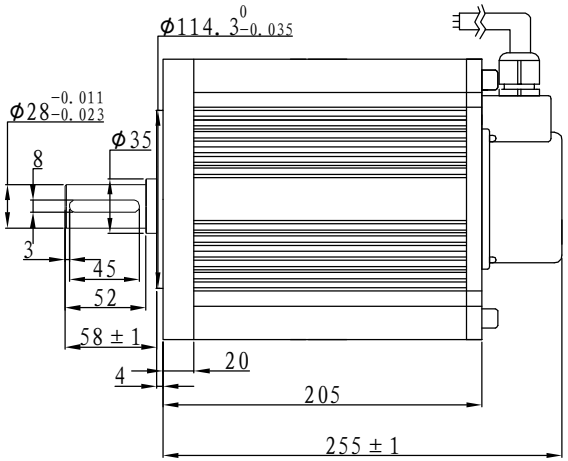


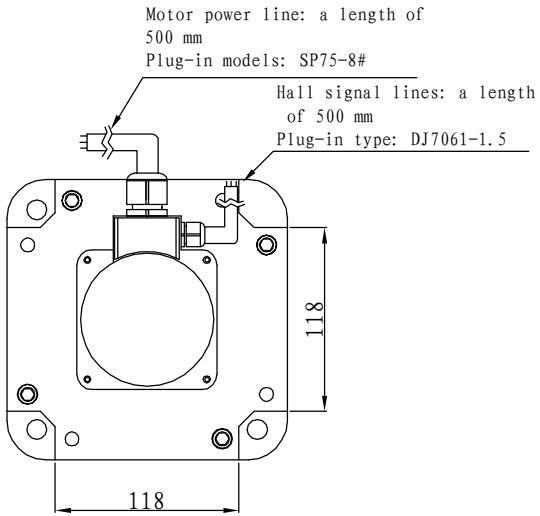


### Motor to Hall Relationship

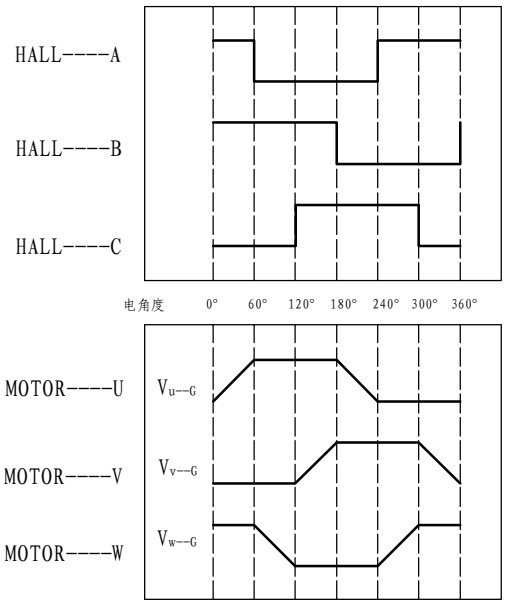


PHASE TO GROUND VOLTAGE
ROTATION CW FROM THE FLANGE

### Line Define

#### Power Wire

| | |
|---|---|
| Red | Motor U |
| Yellow | Motor V |
| Blue | Motor W |

#### Feedback Wire

| Hall line colour | Hall signal definition | Plug serial number |
|---|---|---|
| Orange and black | 5V | 1 |
| Orange | 0V | 2 |
| Yellow | Hall A | 4 |
| Blue | Hall B | 5 |
| Green | Hall C | 6 |

### Tecnichal Data

| | |
|---|---|
| Type | 180WD-M16020-72V |
| Power (KW) | 3.4 |
| Rated voltage (V) | 72 |
| Rated current （A） | 55 |
| Rated speed (rpm) | 2000 |
| Rated torque （NM） | 16 |
| Rotor inertia （Kgcm2) | 55 |
| Protection rank | IP65 |
| Insulation rank | F |
| Appropriate environment | Temperature: 0～50℃<br>Humidity: ＜90%<br>(No dewdrop) |
| Motor weight （KG） | 18.6 |

## Demension

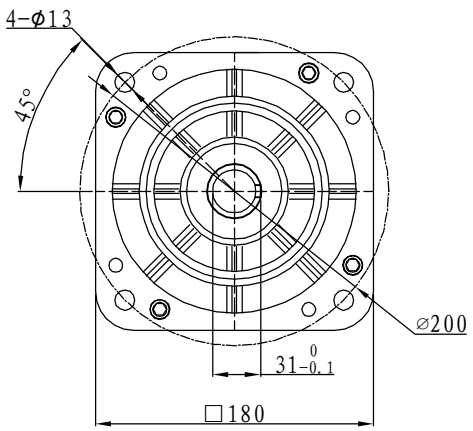


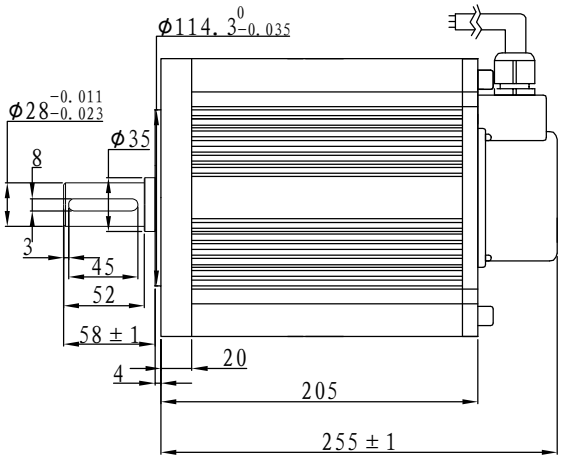


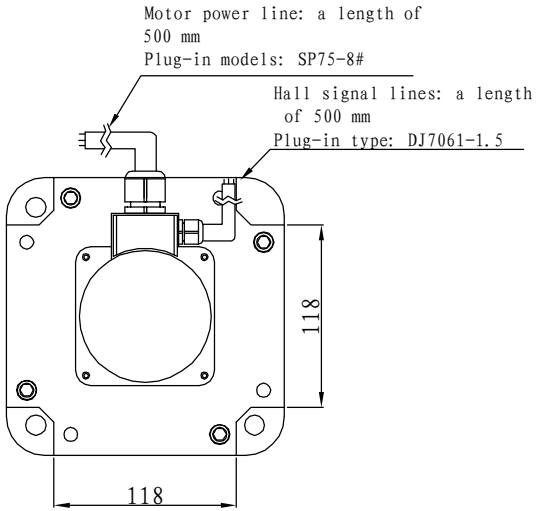


### Motor to Hall Relationship

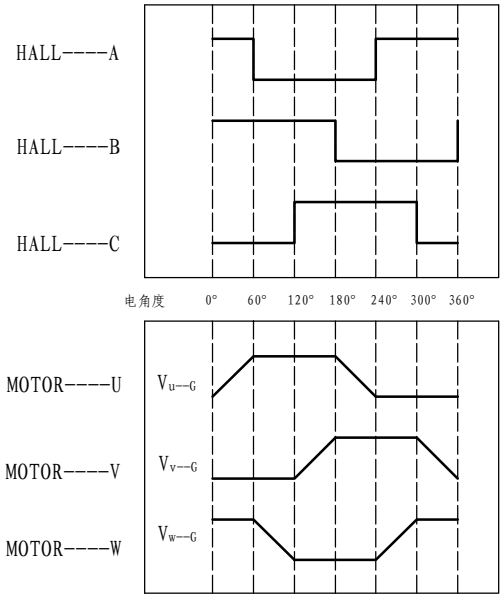


PHASE TO GROUND VOLTAGE
ROTATION CW FROM THE FLANGE

### Line Define

#### Power Wire

| | |
|---|---|
| Red | Motor U |
| Yellow | Motor V |
| Blue | Motor W |

#### Feedback Wire

| Hall line colour | Hall signal definition | Plug serial number |
|---|---|---|
| Orange and black | 5V | 1 |
| Orange | 0V | 2 |
| Yellow | Hall A | 4 |
| Blue | Hall B | 5 |
| Green | Hall C | 6 |

### Tecnichal Data

| | |
|---|---|
| Type | 180WD-M16020-96V |
| Power (KW) | 3.4 |
| Rated voltage (V) | 96 |
| Rated current（A） | 41 |
| Rated speed(rpm) | 2000 |
| Rated torque（NM） | 16 |
| Rotor inertia（Kgcm2) | 55 |
| Protection rank | IP65 |
| Insulation rank | F |
| Appropriate environment | Temperature: 0～50℃<br>Humidity: ＜90%<br>(No dewdrop) |
| Motor weight（KG） | 18.6 |