Chapter 1. Product Overview

The pressure sensitive core of the pressure transmitter uses high-performance silicon piezoresistive pressure oil-filled core, the internal dedicated integrated circuit converts the sensor millivolt signal into a standard quasi-long-distance current signal. It can be directly connected to the computer interface card, control instrument meter, intelligent instrument meter or PLC. This series of products are widely used in industrial process control, petroleum, chemical, metallurgical and other industries.

Chapter 2. Technical Parameters

(1) Power supply:

1. 2088 housing (4~20) mA with display power supply range circumference: (12~32) V
2. 2088 housing (4~20) mA without display power supply range circumference: (9~32) V
3. 2088 housing (4~20) mA+RS485 with display supply electricity range: (10~32) V

(2) Output: (4~20) mA; (1~5) V; (0~10) V; (0~5) V; RS485

(3) Accuracy: 0.2 grade, 0.25 grade, 0.5 grade optional

(4) Measuring range: -0.1…0…60MPa (the measuring range cannot be lower than 10kPa)

(5) Pressure type: gauge pressure, absolute pressure, sealed pressure

(6) Compensation temperature: (-10~70)℃

(7) Working temperature: (-20~85)℃

(8) Medium temperature: (-20~85)℃

(9) Storage temperature: (-40~85)℃

(10) Zero output temperature drift: ±0.3%FS/10℃

(11) Full-scale output temperature drift: ±0.3%FS/10℃

(12) Overload pressure: (0.035~10) MPa (150%FS), (10~60) MPa (125%FS)

(13) Long-term stability: ±0.2%FS/year

(14) Response time: current and voltage output type pressure ≤10ms (rising to 90% FS); RS485 output pressure ≤100ms (rising to 90% FS)

(15) Insulation resistance: 20MΩ/250VDC

(16) Protection level: IP65

(17) Load resistance: (U-9V)/0.02A, U: power supply voltage

Chapter 3. Dimensions

The external structure is shown in Figure 1. The pressure transmitter is composed of a shell, an amplifier, and a wiring terminal. The display type pressure transmitter uses a liquid crystal meter to display.

Figure 1. Default type

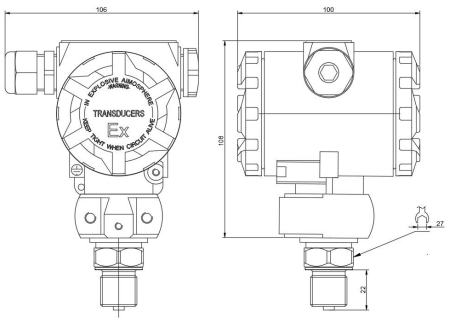

Figure 2. Display type

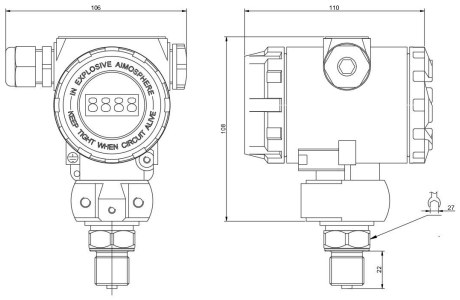

Figure 3. High temperature resistant type

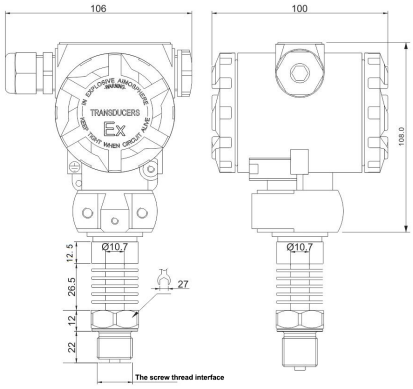

Chapter 4. Installation Method

(1) Choose a place that is easy to operate and maintain for installation;

(2) Install as far away as possible from the vibration source;

(3) It should be installed as far away as possible from the heat source;

(4) Install directly on the pipeline or equipment, and clamp it on the hexagonal base of the transmitter with a wrench during installation.

Figure 4. Installation method

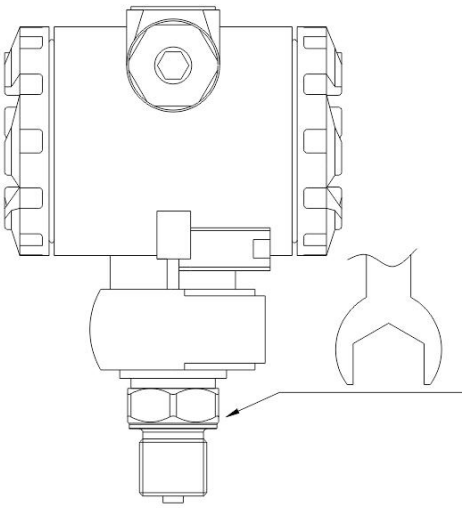

Note: Please use a wrench to screw the base of the meter when installing, do not screw the meter head directly.

Chapter 5. Electrical Connection

Open the back cover of the instrument (terminal face), see terminal, power connection

See Figure 5, Figure 6, Figure 7 below;

Figure 5 Two-wire current output

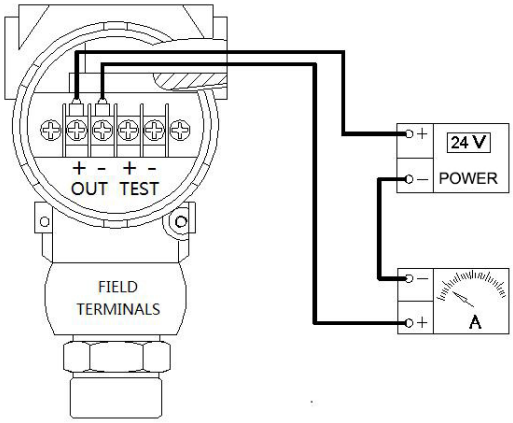

Figure 6 Voltage output

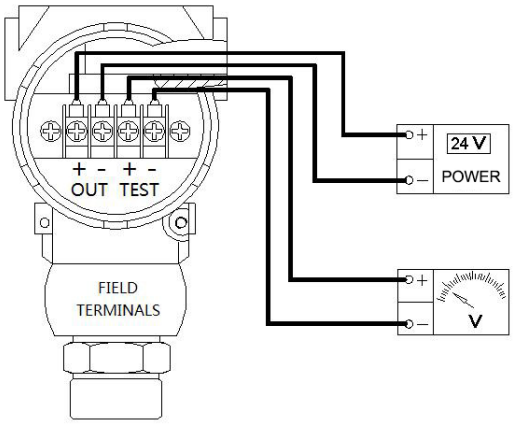

Figure 7 RS485 output

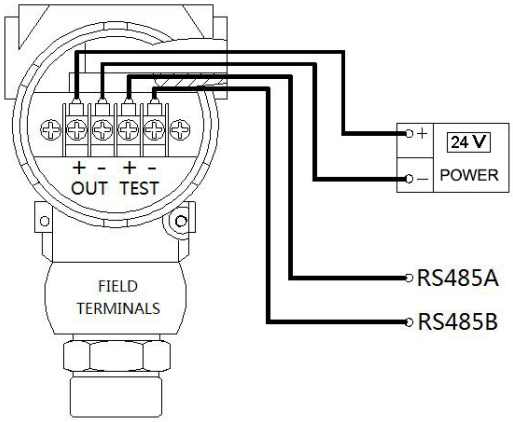

Chapter 6. Function Settings

6.1 Display area description

The main screen and sub-screen display area of the screen have multiple display functions, and the main screen has three types of display.

The display methods are pressure value display, percentage display, display of current.

(There is no display on the secondary screen of the 4~20mA output display. The display with 485 output has two choices of temperature display and current address bit. The temperature value comes from the temperature sensor on the circuit board, and the display switch can be carried out at any time. The display mode set above will be cleared after the next power failure. The LCD display is shown in Figure 8.

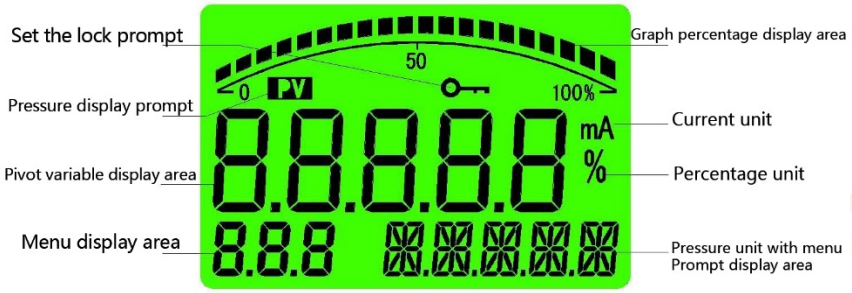

6.2 Description of key functions

Function key "M"

(1) Short press in the measurement mode to open and enter the password setting.

(2) In the measurement mode, press and hold for 5 seconds to clear the main variable (ie, clear the PV).

(3) Short press in the setting mode to enable parameter modification, the modified parameter flashes, and again

Short press to confirm the parameter modification, and the modified parameter stops flashing.

Function key "S"

(1) Short press in the measurement mode is the display mode modification function.

(2) In the setting mode, add one function to the setting parameters.

Function key "Z"

(1) Short press in the measurement mode is the display mode modification function.

(2) In the setting mode, it is the function of setting parameter shift and minus one.

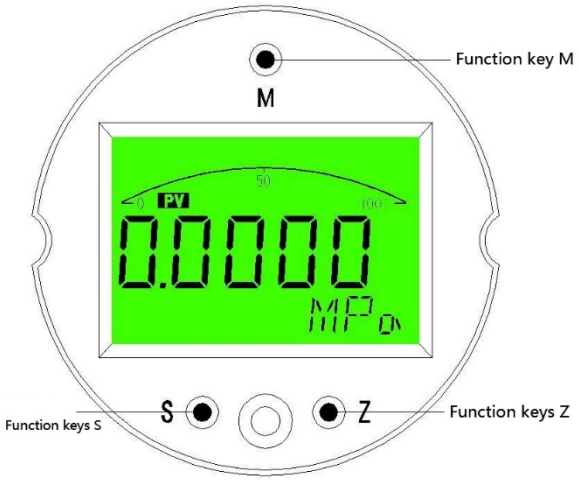

6.3 Menu description

The access code is divided into two types according to the specifications of the transmitter

(1) (4~20) mA output: The access code is "00001", and the display unit, display resolution, and

display mode can be set.

(2) RS485/RS485 & (4~20) mA output:

The password to enter the communication setting menu is "00001", and the address, baud rate, and parity can be set.

The advanced user menu entry password is "00016", which is used when some special settings are required for on-site use of the transmitter.

6.3.1 Function setting ((4~20) mA output)

Loc: The settable range of the password input menu is (19999～99999), and the menu prompt is "PIN"

Set the entry password of the menu. If the password is entered incorrectly or there is no key operation within 30 seconds, it will automatically return to the measurement mode.

Unt: The settable range of user unit setting is (0～18), the menu prompt is each set unit, there are 19 kinds of unit setting, respectively

"MPa", "kPa", "Pa", "bar", "mbar", "psi", "mH2O",

"MmH2O", "inH2O", "ftH2O", "mHg", "mmHg", "inHg",

"Kgf/cm2", "atm", "Torr", "m", "cm", "mm"

Dot: The settable range of display accuracy setting is (0～4), and the menu prompt is the current pressure unit

The display resolution is the number of decimal places displayed in the measurement mode. The user can set it according to the requirements of on-site use. The number of displayed decimal places is not better. The stability of the displayed value should be given priority. At the same time, this menu value will be limited by the maximum display value of the transmitter during calibration. If the set decimal point display digits exceed the 5-digit display range when the maximum display value of the transmitter is displayed, the set decimal digits will be It is limited to the range that guarantees that the maximum display value can be displayed normally.

For example: the calibration range of the transmitter is (0.0000～20.000) MPa; The display accuracy setting range is (0～3), if the display accuracy setting value is 4, The maximum display value will exceed the maximum display range of 5 digits.

SHO: Display mode setting, settable range (0～5)

"0"--Display the main variable, the prompt "-PV-"

"1"-display current, prompt "-mA-"

"2"--Display percentage, prompt "-%-"

"3"-the main variable and current are displayed alternately, and the prompt is "PV-mA"

"4"-the main variable and the percentage are displayed alternately, and the prompt "PV--%"

"5"--current and percentage are displayed alternately, and the prompt is "mA--%"

End: Exit the setting menu, the range can be set (0～1)

"0"— do not save the set value, and exit the setting state, the prompt "NSAVE"

"1"— save the set value and exit the setting state, the prompt "SAVE"

6.3.2 Function setting (RS485 output/RS485 output & (4~20) mA output)

Loc: The settable range of the password input menu is (19999～99999), and the menu prompt is "PIN".

Set the menu enter password. If the password is entered incorrectly or there is no key operation

within 30 seconds, it will automatically return to the measurement mode.

The password to enter the communication setting menu is "00001"

Adr: transmitter address setting. 1-255, the default is 1

Bot: Baud rate setting. Supports 1200, 2400, 4800, 9600, 19200, 38400, 57600, 115200 (Note: The maximum number of digits displayed on the screen is 5, 38400 is displayed as 3840, 57600 is displayed as 5760, and 115200 is displayed as 11520)

ECK: Parity bit setting. Support N, O, E check, the default is N

End: Exit the setting menu, the range can be set (0～1)

"0"—do not save the set value, and exit the setting state, the prompt "NSAVE"

"1"—save the set value and exit the setting state, the prompt "SAVE"

The entry password for the advanced user menu is "00016"

Adr: transmitter address setting. 1-255, the default is 1

Bot: Baud rate setting. Supports 1200, 2400, 4800, 9600, 19200, 38400, 57600, 115200 (Note: The maximum number of digits displayed on the screen is 5, 38400 is displayed as 3840, 57600 is displayed as 5760, and 115200 is displayed as 11520)

ECK: Parity bit setting. Support N, O, E check, the default is N

BdL: Transmit the primary variable value corresponding to 4mA, which will be used as transmit zero value when the range is zoomed. Determines the pressure point of the transmitter output 4mA

BdH: The main variable value corresponding to 20mA is transmitted, which is used as the full point value when the range is zoomed. Determines the pressure point at which the transmitter outputs 20mA

oFt: The zero offset value of the main variable of the transmitter, this offset value will be superimposed on the main variable. It can be used to realize the zero point migration of the transmitter

GAI: The gain coefficient of the main variable. The gain coefficient of the main variable does not perform gain correction on the offset value and the clear value. The resolution is 0.0001FS, the purpose is to give the customer a second calibration

FIL: The maximum filter and damping settings are 30 and the minimum is 0. The larger the value, the stronger the filtering effect

SOL: 4mA reference calibration of the board, modify this data, observe the current of the external ammeter, modify the data, and adjust the current of the ammeter to an accurate 4mA.

SOH: 20mA reference calibration of the board, modify this data, observe the current of the external ammeter, modify the data, and adjust the current of the ammeter to an accurate 20mA.

OUT mA: current test menu, the sub-menu enters the modification mode, which allows the transmitter to output the current value displayed in the menu, one time is 3.800, 4.000, 8.000, 12.000, 16.000, 20.000, 20.800, 22.500mA current

Out LINE: This menu sets whether the output of the transmitter is linear output or square root output selection. The square root output is generally suitable for flow calculation occasions of differential pressure transmitters. Normally please select linear output

End: Exit the setting menu, the range can be set (0～1)

"0"—do not save the set value, and exit the setting state, the prompt "NSAVE"

"1"—save the set value and exit the setting state, the prompt "SAVE

Restore factory settings, the access password is "-10000"

Loc: Password input menu, the range can be set (19999～99999), the menu prompts "PIN" to set the menu to enter the password. If the password is entered incorrectly or there is no key operation within 30 seconds, it will automatically return to the measurement mode. The output password is "-10000", click the "function key M" to restore the factory default state

Chapter 7. Safety Instructions for Pressure Transmitter

(1) Be careful when handling and installing the transmitter to avoid collisions that may affect the performance of the circuit.

(2) There is an isolation diaphragm in the pressure inlet of the transmitter. Do not touch it with other objects.

(3) Pay attention to the seal at the external thread of the transmitter, otherwise the pressure will be unstable.

(4) If you encounter any problems during product installation and use, please contact our company. When the product is abnormal, please do not open it for repair by yourself, and contact the manufacturer in time.

(5) This product is forbidden to be used in explosion-proof places.

Chapter 8. Attention

(1) The transmitter is used in a medium that is non-corrosive to silicon and stainless steel (or aluminum alloy).

(2) The maximum pressure that may occur in the measured system momentarily cannot exceed the rated value of the load pressure.

(3) The back of the pressure transmitter must not be in contact with conductive, corrosive liquids or gases.

(4) Do not insert sharp or hard objects into the pressure input hole to prevent damage to the core.

(5) No water can enter the lead wire at the rear of the sensor.

(6) Please strictly follow the precautions when using it to avoid accidents.

Chapter 9. Warranty and after-sales service

The company promises to customers that the hardware accessories provided when the instrument is supplied are free of defects in materials and manufacturing processes.

Calculated from the date of purchase of the instrument, if a user's notice about such defects is received during the warranty period, the company will implement unconditional free maintenance or free replacement for products that are indeed defective, and all non-customized products are guaranteed to be returned within 7 days.

Disclaimer

During the warranty period, product failure due to the following reasons does not belong to the scope of the three guarantees:

(1) Product failure caused by improper use by the customer.

(2) The customer disassembles, repairs and refits the product without authorization, causing product failure.

After-sales service commitment:

(1) For customer's technical questions, we promise to respond and deal with the user's questions within 2 hours after receiving the user's question.

(2) For instruments returned to the factory for repair, we promise to issue test results within 3 working days after receiving the goods, and repair results within 7 working days.

Chapter 10. Modbus addresses and examples

10.1 Overview

This protocol complies with the MODBUS communication protocol and adopts the subset RTU mode and RS485 half-duplex working mode in the MODBUS protocol.

10.2 Serial data format

Serial port settings: none/odd/even parity, 8 data bits, 1 stop bit.

Example: 9600, N, 8, 1 means: 9600bps, no parity, 8 data bits, 1 stop bit.

The serial port baud rate supported by this transmitter is:

1200, 2400, 4800, 9600, 19200, 38400, 57600, 115200

Polynomial for CRC check: 0xA001.

The communication protocol can transmit signed integer numbers or floating-point type data.

10.3 Communication commands

Signed integer output:

(1) A. Send the read command format: Table 2

Address	Function code	Starting address (H)	Starting address (L)	Number of data (H)	Number of data (L)	CRC16 (L)	CRC16(H)
0X01	0X03	0X00	0X00	0X00	0X01	0X84	0X0A

B. Return to read data format: Table 3

Address	Function code	Data length	Data (H)	Data (L)	CRC16 (L)	CRC16(H)
0X01	0X03	0X02	0X00	0X01	0X79	0X84

(2) A. Write command format (06 function code) Example: Table 4

Address	Function code	Starting address (H)	Starting address (L)	Data (H)	Data (L)	CRC16 (L)	CRC16(H)
0X01	0X06	0X00	0X00	0X00	0X02	0X84	0X0A

B. Return to read data format Example: Table 5

Address	Function code	Starting address (H)	Starting address (L)	Data (H)	Data (L)	CRC16 (L)	CRC16(H)
0X01	0X06	0X00	0X00	0X00	0X02	0X08	0X0B

(3) Abnormal response return: Table 6

Address	Function code	Exception code	CRC16 (L)	CRC16(H)
0X01	0X80+ Function	0X01 (Illegal		

	code	function) 0X02 (Illegal data address) 0X01 (illegal data)		

10.4 Supported commands and the meaning of commands and data Table 7

Function code	Starting address (10 hex)	Number of data	Bytes	Data range	Instruction definition
0X03 Function code to read data					
Integer reading range					
0X03	0	1	2	1-255	Read slave address
0X03	1	1	2	0-1200 1-2400 2-4800 3-9600 4-19200 5-38400 6-57600 7-115200	Baud rate reading
0X03	2	1	2	0-No parity 1-0DD 2-EVEN	0-no parity 1- odd parity 2-even parity
				9-Bar 10-Mbar 11-kgf/cm2 12-Pa 13-Torr 14-Atm 15-Null 16-M 17-Cm 18-Mm 19-inHg 20-mHg 21-Mh2O 22-℃	
0X03	4	1	2	0-#### 1-###. # 2-##. ## 3-#. ### 4-#. ####	The decimal point represents 0-4 decimal points, and the position of the decimal point

					can be adjusted to display the resolution.
0X03	5	1	2	Integer data measurement value output	Display range -32768~32767
0X03	6	1	2	0-Current display 1-Pressure display 2-Percentage display	Main screen display mode
0X03	7	1	2	0-No display 1-Display temperature	Secondary display mode
0X03	8	1	2	0-linear output 1- Square root output	Current output mode
0X03	9	1	2	0-30	Filter coefficient
Floating point reading range					
Function code	Starting address (10 hex)	Number of data	Bytes	Data range	Instruction definition
0X03	20-21	2	4	2-20.000	Theoretical current output
0X03	22-23	2	4	-19999-99999	Pressure output
0X03	24-25	2	4	-19999-99999	Primary variable offset value
0X03	26-27	2	4	-19999-99999	Low point of transmission range
0X03	28-29	2	4	-19999-99999	High point of transmission range
0X03	30-31	2	4	-19999-99999	Low sensor range
0X03	32-33	2	4	-19999-99999	High point of sensor range
0X03	42-43	2	4	0-1.00000	Main variable gain coefficient
0X03	181-182	2	4	（-40-120）℃	Internal

					temperature compensation sensor (board temperature)
The above is the range of floating-point reading data					
0x06 Function code write data					
0X06	0	1	2	1-255	Rewrite slave address
0X06	1	1	2	0-1200 1-2400 2-4800 3-9600 4-19200 5-38400 6-57600 7-115200	Modify the baud rate
0X06	2	1	2	0-No parity 1-0DD 2-EVEN	Modify the communication verification method
0X06	24-25	1	2	-19999-99999	Zero offset value. Pressure output value = calibrated measurement value + zero offset value
SAVE					
0X06	65535	1	2	0- Save to user area	

Example of reading pressure command: (hex)

Tx: 01 03 00 16 00 02 25 CF

01 slave address, 03 function code, 00 16 starting location, 00 02 the number of words read.

Rx: 01 03 04 BE 40 E6 12 15 A2

01 slave address, 03 function code, 04 byte number, BE 40 E6 12 is the floating point number of IEE754.